NOTES:
1. OVERALL HEIGHT IS IN LOADED CONDITION. UNLOADED HEIGHTS MAY BE 4" ABOVE HEIGHTS SHOWN.
2. DO NOT SCALE DRAWING.
3. ALL DIMENSIONS ARE APPROXIMATE AND SUBJECT TO ENGINEERING CHANGES.
4. DRAWING MAY OR MAY NOT SHOW ALL ITEMS AS DESCRIBED IN THE WRITTEN DETAIL SPECIFICATIONS.
5. INCLUSION OF AN ITEM ON THE DRAWING DOES NOT CONSTITUTE INCLUSION OF THAT ITEM WITH THE FINAL DELIVERED UNIT.
6. THE EFFECTIVE DOOR OPENINGS WILL BE APPROX. 2" LESS THAN THE NOTED COMPARTMENT OPENING FOR ROLL UP DOORS AND UP TO APPROX. 4" LESS FOR HINGED DOORS

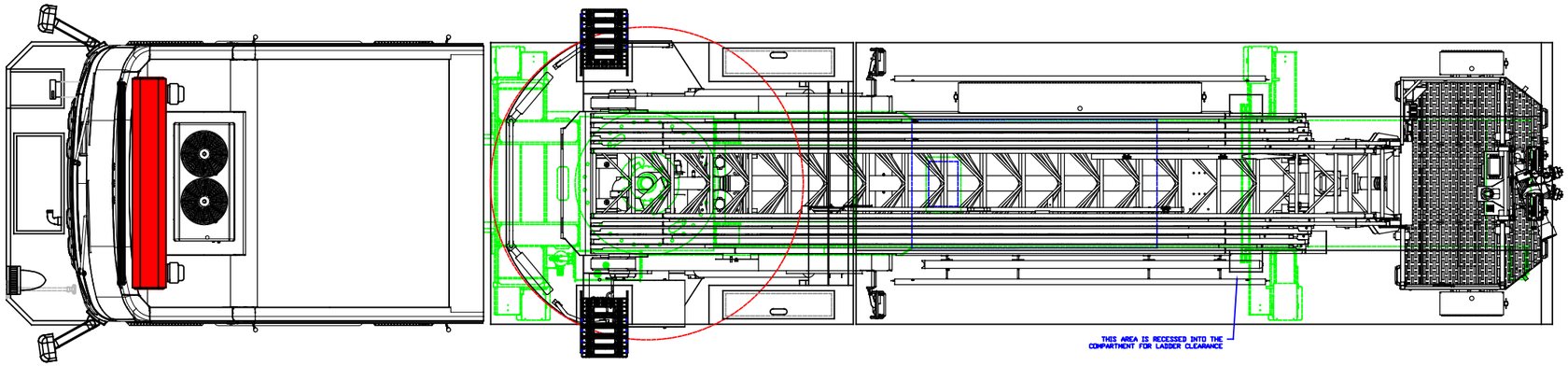

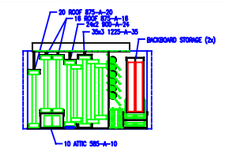

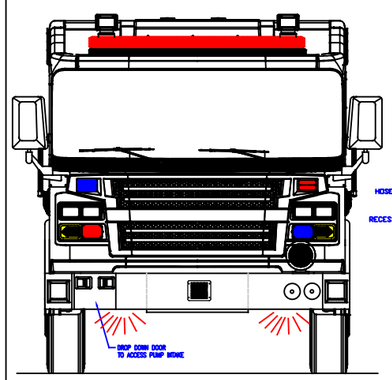

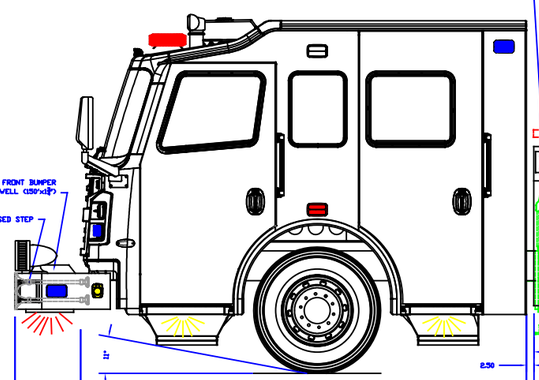

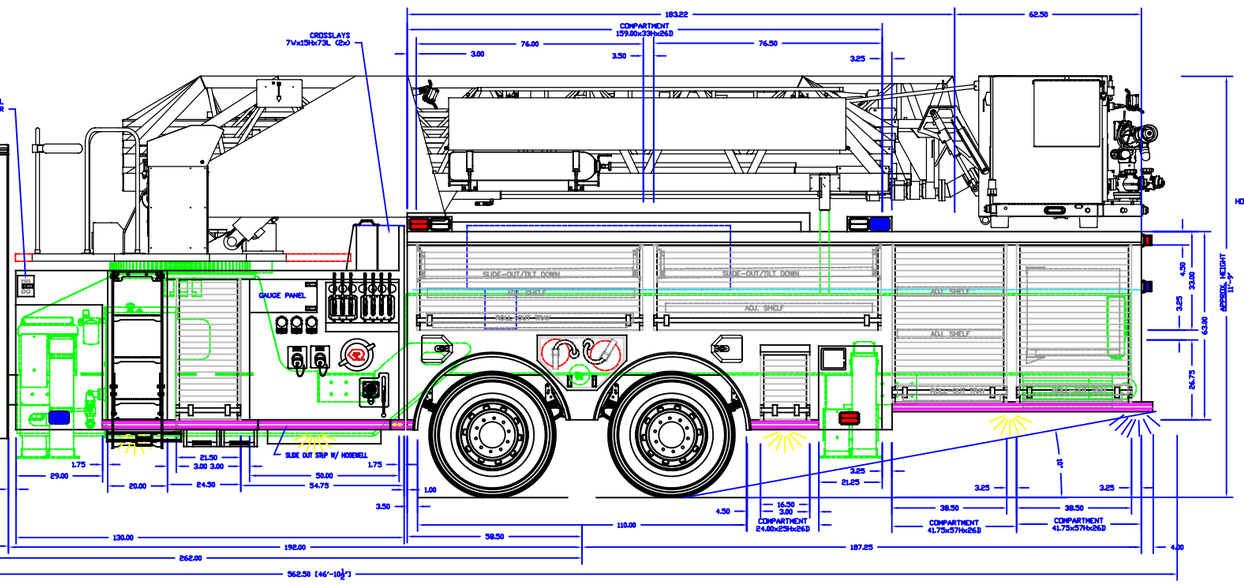

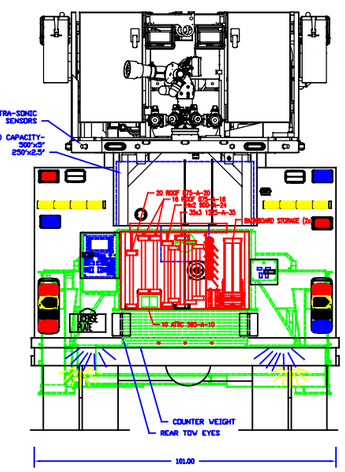

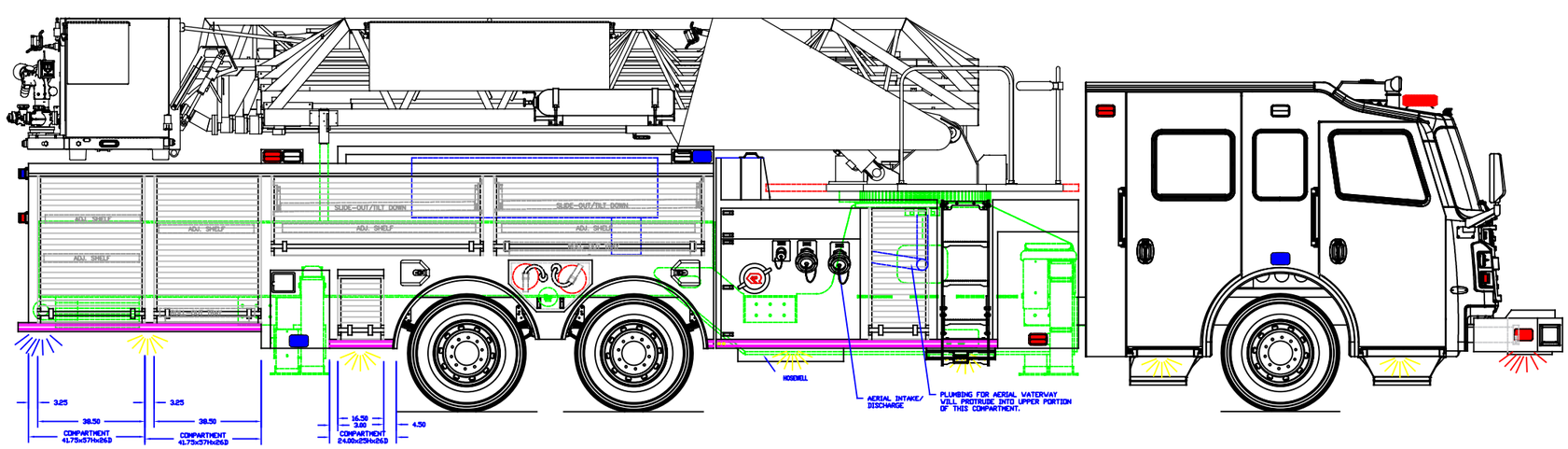

INTIALS: HF
JOB NUMBER: 7580
DATE: 1/3/2019

MAIN FILE: –
DEPT: –
DEALER: –

PRODUCTION APPROVED

APPROVED BY:

REVISED:	–	DATE: –
REVISED:	SRN	DATE: 11/6/18
REVISED:	SRN	DATE: 7/27/18
REVISED:	SRN	DATE: 7/11/18
REVISED:	SRN	DATE: 1/2/18
REVISED:	SRN	DATE: 11/20/17
REVISED:	SRN	DATE: 6/16/17
REVISED:	SRN	DATE: 5/26/17
DRAWN:	SRN	DATE: 5/4/17

PROPRIETARY AND CONFIDENTIAL
THE INFORMATION CONTAINED IN THIS DRAWING IS THE SOLE PROPERTY OF ROSENBAUER. ANY REPRODUCTION IN PART OR AS A WHOLE WITHOUT THE WRITTEN PERMISSION OF ROSENBAUER IS PROHIBITED.

CHASSIS:	ROSENBAUER 7011
PUMP:	WATEROUS 1500 GPM
TANK:	POLY/300/30(FOAM)
PANEL MATL:	STAINLESS STEEL
COMP INTERIOR:	LINE-X
MAXIMUM HEIGHT	NONE
MAXIMUM LENGTH	NONE
BODY WIDTH	101"

QUEEN CREEK, AZ
88' MM COBRA

ROSENBAUER FX 3/16"

DRAWING NUMBER: QUEEN CREEK, AZ 88MM COBRA
REV: 7